G-FITNESS

TZ-6017

Smith Machine

USER MANUAL

The training equipment is in accordance with EN957/GB17498（Class S）

Profile of Tianzhan Fitness Equipment Co., Ltd

Tianzhan Fitness Equipment Co., Ltd was set up in 1998 and is located in Dezhou city, Shandong Province.It is one registered capital of 1,000,000RMB and one area of 20,000 ㎡ with one structure area of 15,000 ㎡, which.Tianzhan is one professional and modern manufacturer mainly specializes in body building project, and combine the production, aftersales service. We can supply the sincere service and the core value is “service by heart”

1. We have the professional team to insist the company spirit of speediness、accuracy and strong,which ensure the machines to suit for the market and supply our machines to customers with the best quality and competitive price. We can supply the products and service at the international level on the base of attitude of professional and responsibility, and also leading the body-building activity and new habit of fitness and sports. Then create a new career and benefit the whole mankind.

2. Company development status
We have the strong basis of machines production, professional engineer, advanced equipment and sophisticated processing technology. Now we have made the ISO9001 quality management system and CE certification with full Implementation in the increasingly competitive market and with continuous improvement and innovation in practice. We are far ahead on the quality and using function, and establish the SOP (standard operation process) to make the production smooth and efficiency greatly raised. We also have the storage manage system with the high standard. We are expanding the scale and self-research to make the product diversity for meeting the different demand, and keeping the high level in the fitness equipment line.

3. Company Culture
Our operation principle is “Professional Production and Excellent Quality”as the customers requirement. We hope build the corporate image from the specialized level and unremitting efforts. Our management is humanbased, it’s effective and clear for the going concern.

4. Products and Service
We use the international advanced design of fitness equipment, optimize performance, and solve the problem of using difference from the different area and race, to make them useful for all people. All steel parts are cut by the laser, and We use the full-automation numerical control pipe bender to ensure the accuracy and beautiful of the machines. The model welding technology is ensured the accuracy and same to achieve the interchange of the parts. In view of market challenges, We import the power coatings and make the double coating double baking, to ensure the fastness, impact resistance and glossiness. Our machines can use the different colour as the customers’ requirement in the gym, sporting center and home, to make the machines in tridimensional collocation. Our aftersales service team can supply the quick and professional service for every customer.

! CAUTION

Read all precautions and instructions in this manual before using this equipment.

Table Of Contents

Important Safety Instructions----------4

Parts List----------6

Exploded View----------8

Measurement Guide----------9

Assembly Instruction----------10

Assembly----------11

Exercise Instruction----------14

Adjustment Instructions----------15

Maintenance and Repair----------16

Weight Training Tips----------17

Important Safety Instructions

In the process of maintenance, the fitness equipment is only allowed to use our accessories. In order to avoid unnecessary damage and loss, please don’t act beyond the range of movement. When using exercise equipment, basic precautions should always be taken, including the following:

1. Carefully read and fully understand the instructions before using the equipment.
2. This equipment is used for organizations such as sport associations,educational establishments,hotels,sport halls,clubs,rehabilitation centres and studios etc.
3. Incorrect or excessive training may brings injuries to health
4. Setting of the load correctly and making equipment further adjustments(e.g.seat adjustments)
5. The equipment should be installed and used on the clean, smooth and stable ground, not near the water area, and not used in the open air. Please use it under the guidance of professional fitness coach
6. Any of the adjustment devices to interfere with the user's movement should not be left projecting
7. Care and maintenance:
   a).The safety level of the equipment can be maintained only if it is examined regularly for damage and wear, e.g. ropes, pulleys, connection points;
   b).Replace defective components immediately and/or keep the equipment out of use until repair;
   c).Special attention to components most susceptible to wear.
8. The maximum range of movement is at least 0.5 meters security zone outward; please don’t place the items with edges and corners which can hurt person.
9. The equipment is not applicable for children to use.Children should be far away from it when using. Teenagers should also use the equipment under adults supervised.
10. Before beginning any fitness program, you should obtain a complete physical examination from your physician or coach. The correct warm-up is the premise of your safe exercise, when exercising, if you appear tachycardia, dizziness, nausea, chest pain or other abnormal symptoms, please stop practice immediately and consult a doctor
11. The users should exercise according to own health condition, weak or disabled person must be approved by physician and accompanied by coach to use the equipment;
12. The patients who suffer from cardiovascular disease, hypertension, diabetes and other disease which are not suitable for vigorous exercise must be issued proof by the hospital at or above the county level

13. The equipment is not used for medical apparatus and instruments.
14. Before using every time, please carefully check for looseness and wearout of any parts and replace defective components immediately then use, otherwise happen to accident.
15. Training equipment shall only be used in areas where access and control is specifically regulated by the owner.The extent of control depends on the users,e.g.degree of reliability,age,experience,etc.;
16.Where the training equipment is designed to weight stack unguarded,the person exercising should face the equipment at all times during the exercise.The weight stack should remain within the field of vision of the user throughout the exercise to prevent danger to a third party.
17. The training equipment shall only be used in supervised areas.
18. In order to prevent the accident from happening, please make all of moving parts clear. Do not selfishly loosen and remove any components of the equipment to avoid damage.
18. In the exercise,:
a).The users should wear pure cotton sportswear, not wear robes or other clothes easy to be stuck. Chemical fiber clothes are easy to generate static charge to cause possibly damage of the equipment;
b).The users should wear the light and comfortable sports shoes and remember not to wear slippers, leather shoes and high-heeled shoes or barefoot to avoid safety problems
20. When carried, moved or changed placement status, the equipment should be placed slightly and carefully and keep the equipment leveled.
21.To master your own exercise intensity and adjust the movement breath, the users do not hold your breath for sports.
22.Only use the equipment according to the instructions, do not use similar specifications of other manufacturers as the basis and can not use the equipment to do some actions without reach on function.
23.Please consult our company if any problems during use and maintenance.

Carried Standard: EN957-1,EN957-2
Product Type: TZ-6017
Limited Number: 1 person
Machine Size(L*W*H): 1400*2090*2500mm
Maximum User: 110kgs
Maximum Load: 300kgs

Parts List

NOTE:SOME OF THESE PARTS MAY COME PRE-INSTALLED

Item No.	Description	Qty	Item No.	Description	Qty
1	Socket Head Cap Screw (M10*15)	2	27	Stocket Head Cap Screw(M10*25)	18
2	Stocket Head Cap Screw(M8*30)	4	28	60*120 Elliptic Mat(049)	4
3	Hex Jam Nut(M8)	4	29	Socket Head Cap Screw (M10*35)	4
4	Self-Tapping Screw(M5*15)	8	30	Foot Tube Pad(211)	2
5	60*120 Oval Tube Seal-capping(016)	4	31	Hex Thin Nut(M10)	6
6	Socket Head Cap Screw (M8*30)	2	32	Button Philips cap Screw(M5*10)	12
7	DQ002 Seal-Capping(Φ 10.5*φ43*6)	4	33	Socket Set Screw (M8*12)	16
8	Socket Head Cap Screw (M10*35)	4	34	Socket Set Screw (M5*35)	4
9	Socket Head Cap Screw (M8*30)	2	35	Guide Pillar Installation Cover	4
10	Socket Set Screw (M8*12)	2	36	Hex Jam Nut(M5)	4
11	6203 Bearings	2	37	Hex Thin Nut(M5)	8
12	LM30UU Linear Bearings	4	38	Socket Head Cap Screw (M10*40)	4
13	Φ 45 Circlip For Hole	4	39	Hex Jam Nut(M10)	4
14	60-28 Bearings	4	40	Tie Wire(Φ 4)	4 Mast
15	Φ 52 Circlip For Hole	4	41	Socket Head Cap Screw (M10*25)	8
16	Guide Rod Pad(056)	4	42	Damped Locater Block(038)	2
17	Smith by Insulating Pad(108)	2	43	Hex Nut(M8)	2
18	Smith Fender(107)	4	44	Damping Assembly(057)	2
19	Smith Rubber Sleeve(110)	2	45	Pulley Yoke(021)	4
20	Hex Thin Nut(M10)	2	46	80 Aluminum Sheave	4
21	Button Philips cap Screw(M5*10)	8	47	Long Plastic Bar	2Mast
22	Plastic Sleeve(078)	4	48	Push Rod With Foam Cylinder(Φ 75*φ25*445)	1Set
23	60*120 Oval Tube Seal-capping(016)	2	49	Support Column Distance Ring(046)	8
24	Self-Tapping Screw(M5*15)	2	50	Barbell Support Column(047)	8
25	Stocket Head Cap Screw(M8*15)	20	51	Press Bar Limit Column(100)	2
26	GT003 Sleeve	8			

Exploded View

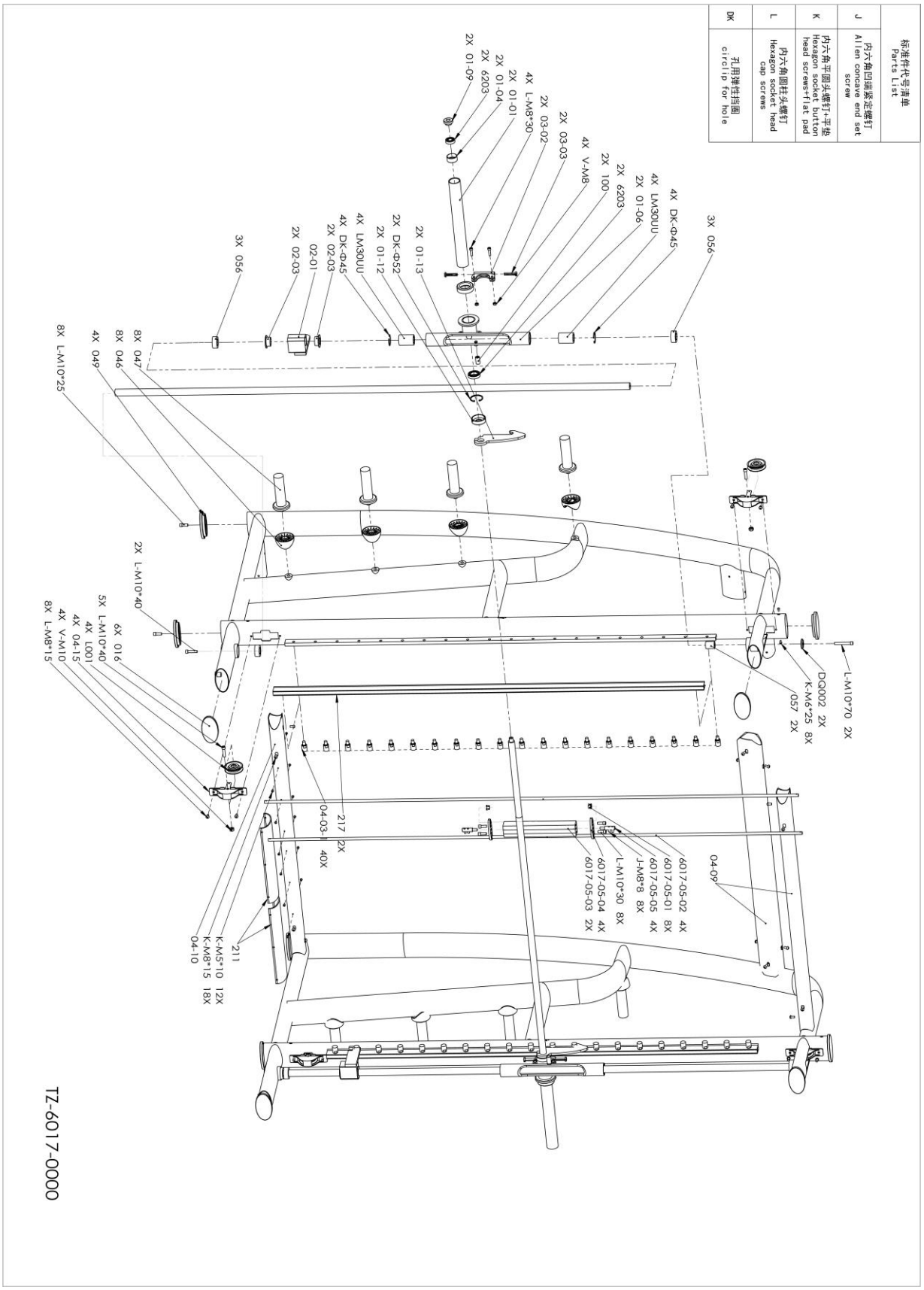

Measurement Guide

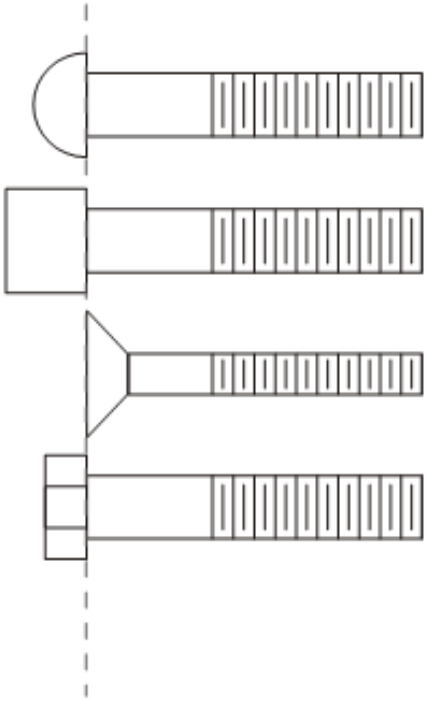

BHCS = Button Head Cap Screw

SHCS = Socket Head Cap Screw

FHCS = Flat Head Cap Screw

HHB = Hex Head Bolt

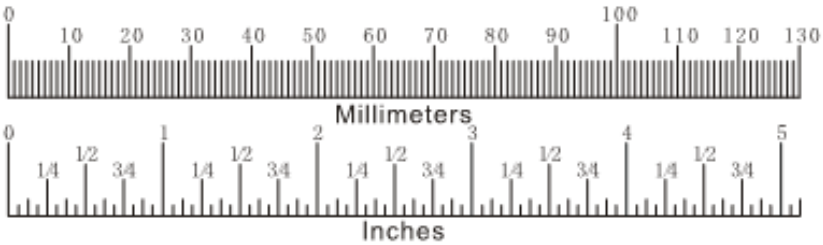

Assembly Instruction

Assembly of the equipment takes professional installers about 2 hours.If this is the first time you have assembled this type of quipment,plan to spend more time.It is strongly recommended to assemble the equipment by the professional installers.You may find it quicker,safer,easier to assemble this equipment with the help of a friend,as some of components may be large,heavy or awkward to handle alone.It is important that you assemble your product in a clean,clear,uncluttered area.This will enable you to move around the product while you are fitting components and reduce the possibility of injury during assembly.

Note

As with any assembled part,proper alignment and adjustment is critical.While tightening the fasteners,be sure to leave room for adjustments.Do not fully tighten the fasteners until instructed to do so.Be careful to assemble the components in the sequence presented in this guide.

Assembly

Step1

1. Attach the frame components to intermediate connecting tube.

Attach the frame components to intermediate connecting tube,using:

Eighteen M10*10 hex socket round head bolts Eighteen Φ11*Φ20*2 washers

Step2

1.Install guiderod(6017-04-18) into guiderod hole of press components;

Install the guiderod into left and right spacing components(6017-0201、6017-0202);

Attach the rope fixed group(6017-03-00) ,the press components to the location guide(6017-04-18).Using:

two M10*70 hexagon socket head screws two Φ11*Φ20*2 washers

two power metallurgy Sleeves (GT002) two damping components(057)

two M10*40 hexagon socket head screws four guiderod protective pads(056)

four M8*30 hexagon socket head screws four Hex Jam Nut(M8)

two tie wire fixed axis(6017-05-05) eight socket set screws(M8*8)

four hex nuts(M10)

Step3

1. Install the rope according to the ropewalking map.Using:

two tie wire ropes eight socket set screws (M8*8)

two tie wire fixed axis(6017-05-05)

Step1 Drawing

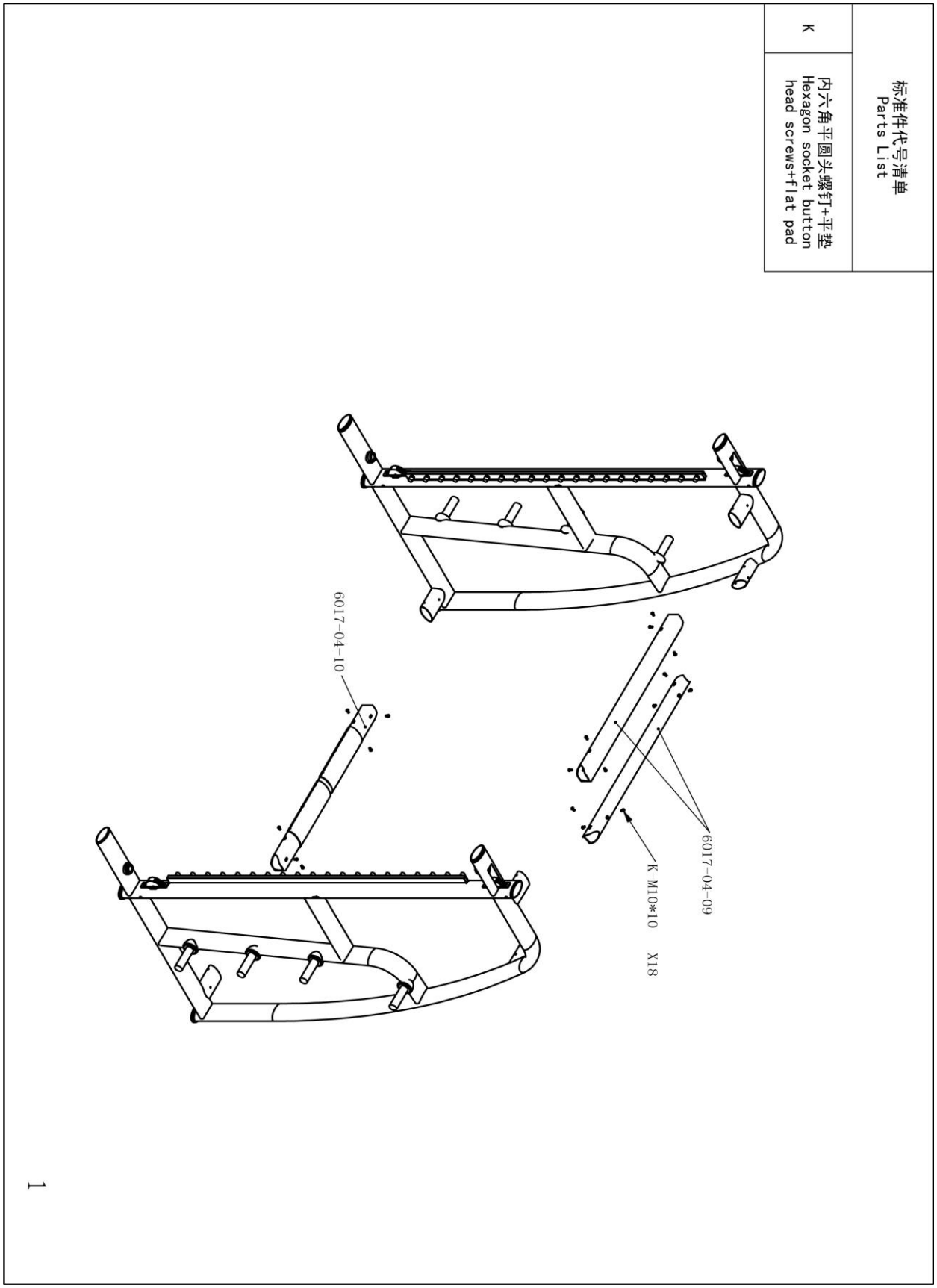

Step2 Drawing

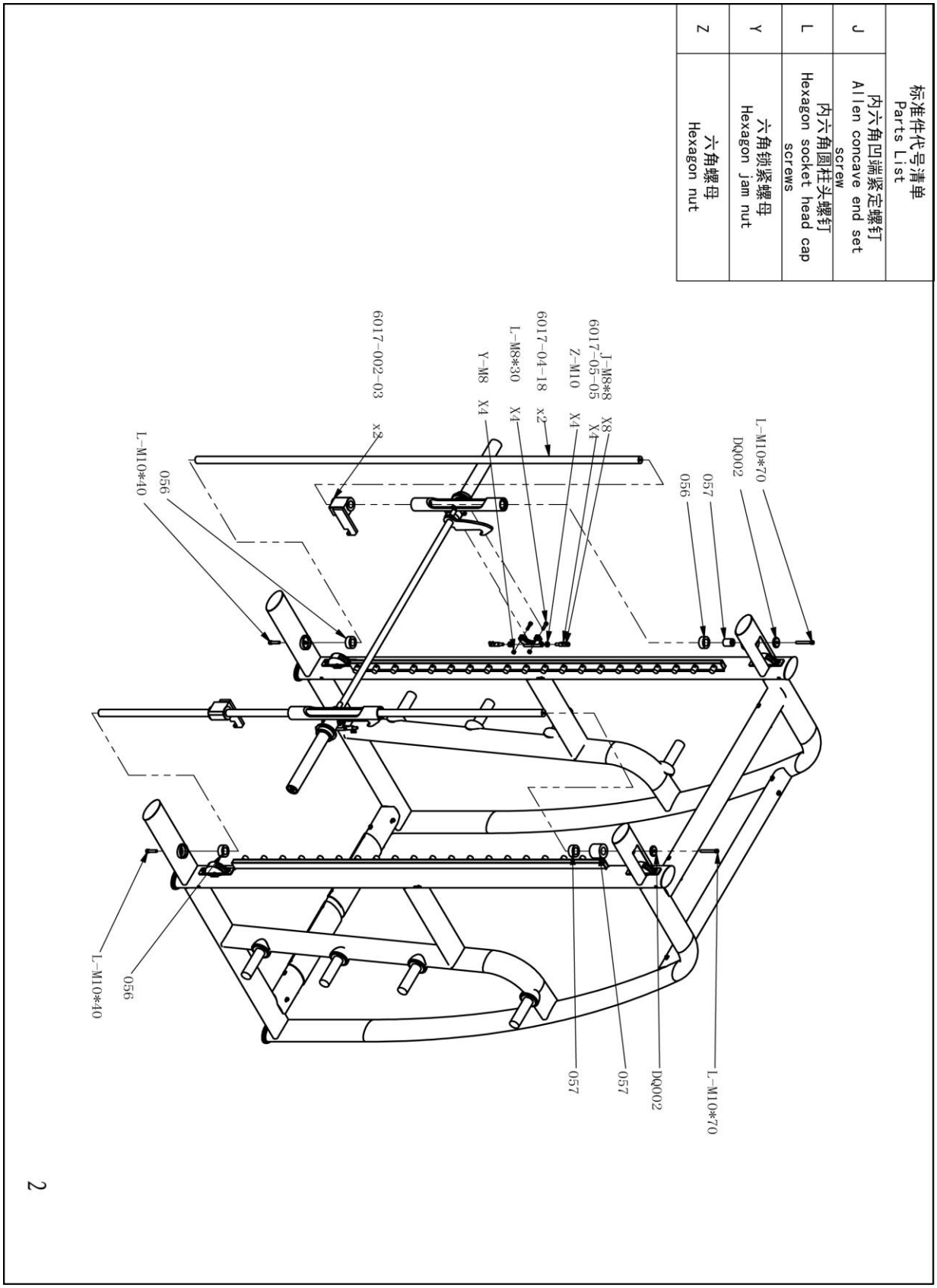

Step3 Drawing

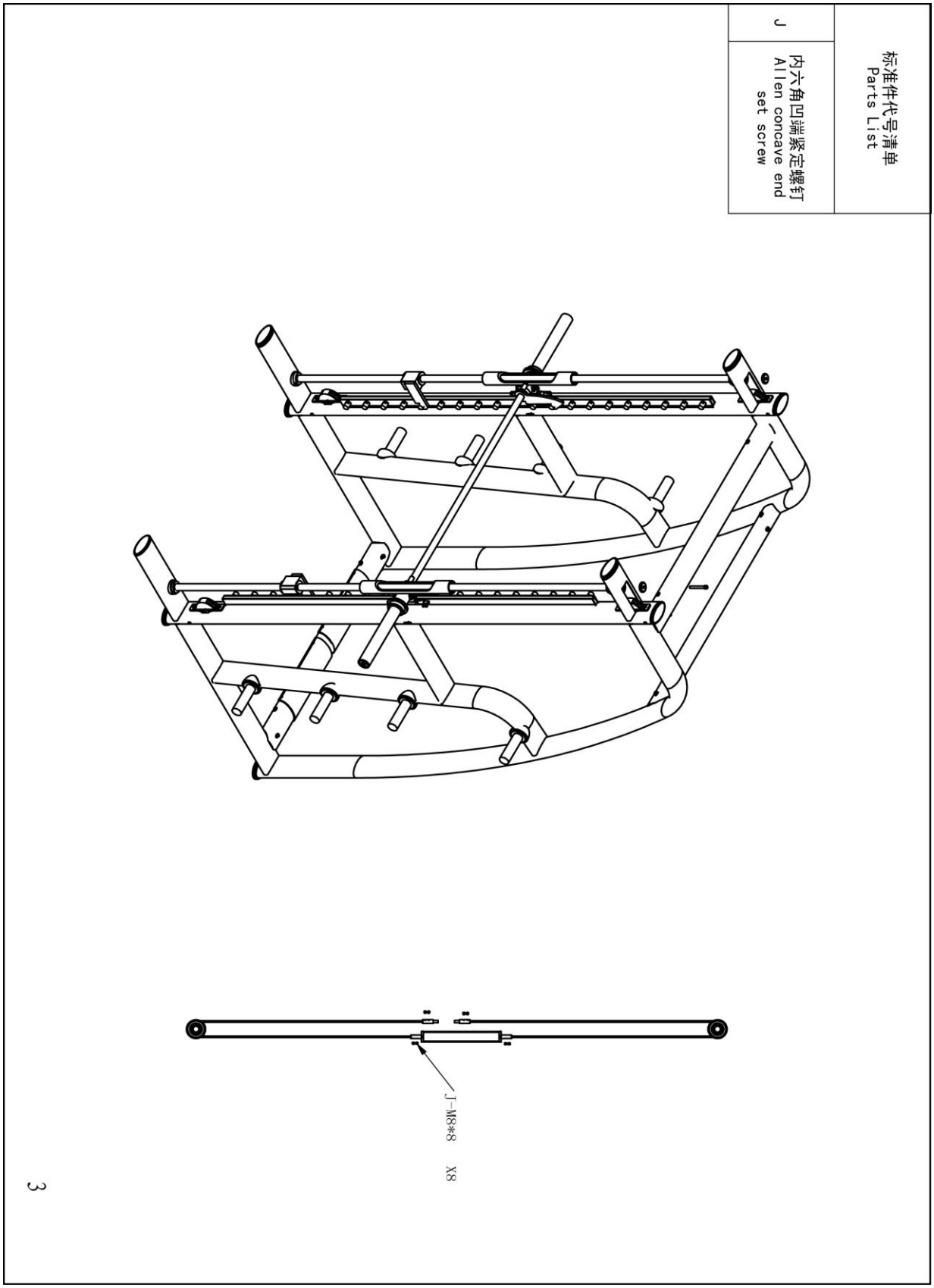

Exercise Instructions

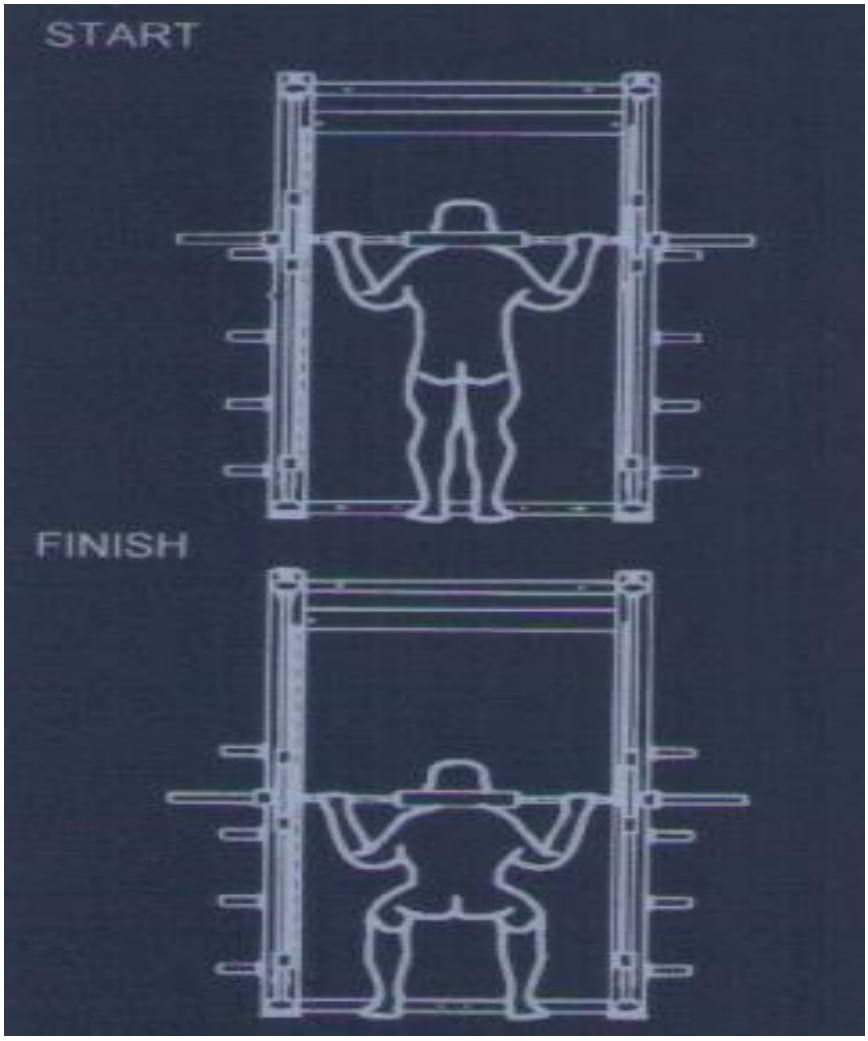

Exercise Instructions

1. Select an appropriate weight according to adjustment of barbell disc.
2. Adjust barbell to desired position.
3. Grasp barbell stem with hands, put the stem on the shoulder and then body squat downward slowly.
4. Slowly return to the starting position.

Adjustment Instructions

1. Hold the barbell stem with hands; adjust it to desired position upward and downward to make the insurance on both sides hanging on the corresponding positioning axis.
2. After adjustment, the users ensure that the insurance has been hanged on the positioning axis completely and then use.

Maintenance and Repair

1. Within seven days since the purchase date, we can allow the customers to choose the method of returning, exchanging or maintaining goods if the equipment appears quality problems. Within seven days to fifteen days since the purchase date, we can allow the customers to choose the method of exchanging or maintaining goods if the equipment appears quality problems.
2. Service

   Freely repair under warranty, and charge for the corresponding components and maintenance if the equipment is out-of-warranty.

   Strength Machines: Main Frame and Iron Parts：one year

   Seat Pad, Back Pad, Pulley and Cable etc.：Three month

   Note: Equipment Shell, Plastic Parts, Manual, Leather Sleeves and Package are not in the range of "Maintenance Service", the users can choose Paid Service.
3. Not in the maintenance scope as follows:
   - 3.1. Out-of-warranty
   - 3.2. Provide invalid invoice or warranty certificate (except to prove in the guarantee period), the product model is inconsistent with invoice.
   - 3.3. Not installation and maintenance with the person designated or authorized by TIANZHAN Co. Ltd.
   - 3.4. Working environment is not comfort to the requirement of Manual or not operating in according to Manual.
   - 3.5. Cause failure damages by human factors, e.g. extrusion, bump, wear, scuffing, power supply abnormal, liquid dust erosion.
   - 3.6. Cause failure damages by force majeure, e.g. natural disasters, fire, lighting, biological violations, etc.
4. Special Instructions
   - 4.1. The warranty terms only apply to the mainland of The People's Republic of China (not including Hong Kong and Macao special administrative region and Taiwan area.)
   - 4.2. When purchasing products, if authorized dealers make much promise than warranty cards, please you claim for written proof to guarantee the responsibility of the dealers for additional commitment. And TIANZHAN Co. Ltd cannot assume responsibility.
   - 4.3. Final Authority shall reside with Dezhou Tianzhan Fitness Equipment Co., Ltd.

Service Hotline: 0086 534 5918123

Weight Training Tips

Use this manual to guid you through the basic exercises you can perform on your equipment.To gain maximum results and avoid possible injuiry,consult a fitness professional to develop your complete exercise program.

Always consult your physician before starting any exercise program.

To be successful in your exercise program,it is important to develop an understanding of the basic principles of strength traning.Now that you have your equipment,it is only natural that you want to get started immediately.First,determine a set of realistic goals and objectives for yourself.By deciding on an exercise plan that is right for you prior to starting,you will contribute significantly to your success.

Learn how to perform the exercise correctly before using heavy weight.Correct form is important to avoid injury and to ensure that you work the proper muscle groups.

Know your limitations.If you are new to weight training or are embarking on an exercise regimen after a long layoff,start slowly and build foundational strength over a longer period of time.

Pay attention to your breathing.Exhale when you exert is a general rule of thumb.Never hold your breath.

MF/Customer Service:Dezhou Tianzhan Fitness Equipment Co.,Ltd

Add: Shiji Industrial Zone,Ningjin County,Shandong Province

Tel: 0086 534 5918123

Fax: 0086 534 5066123

Email:tzfitness678@tzfit.com

Website: www.tzfit.com